VR-40

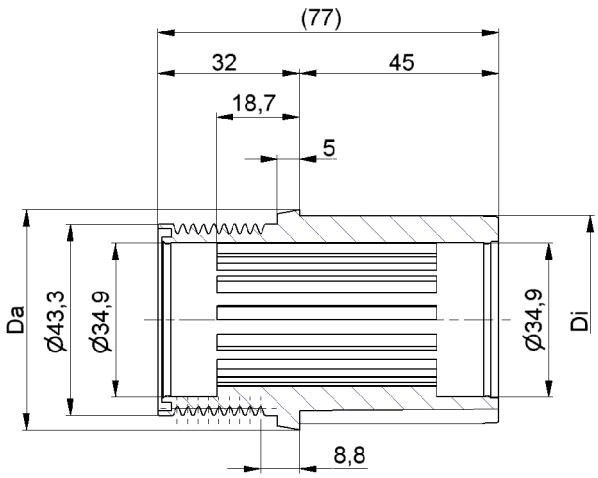

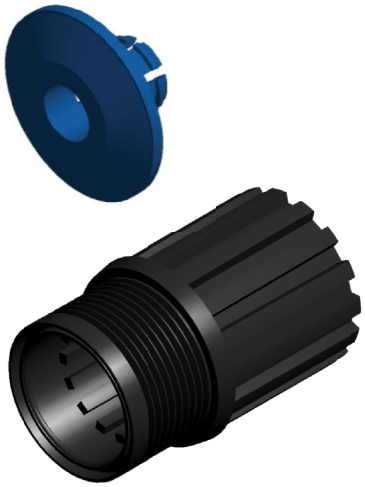

VR-		
Type	Di	Da
50x1,5.40	47,3	49,5

Housing: Plastic

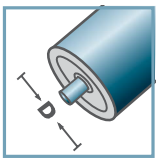

D [mm]
50

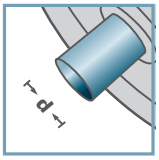

d [mm]
-

C [daN]
-

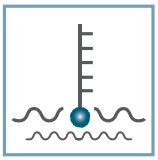

T [°C]
0° - 80°

-

Carton [pcs.]

100

Plastic VR-Belt Drive Wheel

RR-40

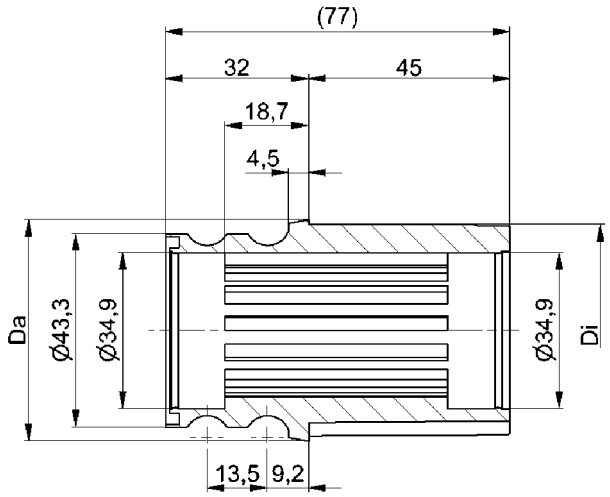

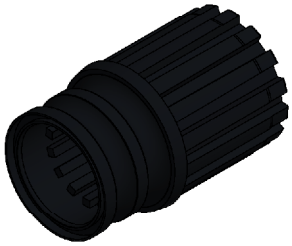

RR-		
Type	Di	Da
50x1,5.40	47,3	49,5

Housing: Plastic

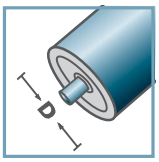

D [mm]
50

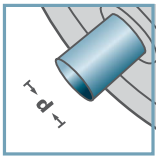

d [mm]
-

C [daN]
-

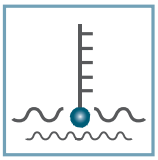

T [°C]
0° - 80°

-

Carton [pcs.]
100

Plastic Belt Drive Wheel

KKR-40

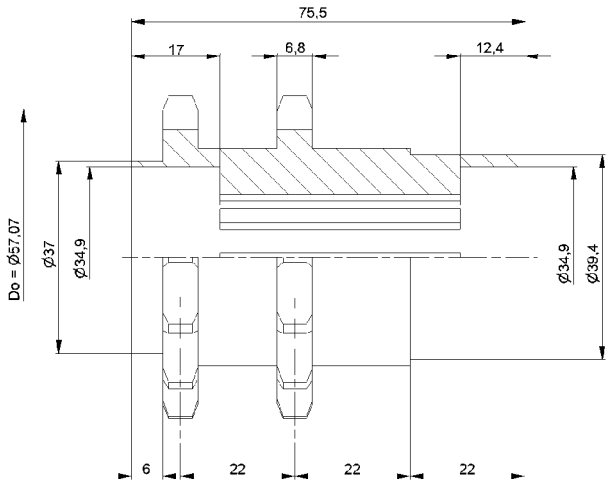

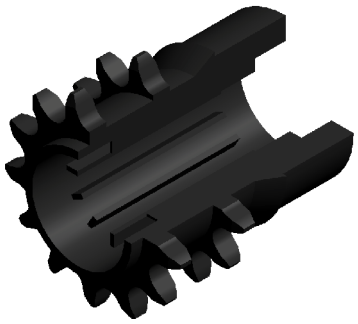

KKR-1/2"x5/16"-Z14

Other dimensions on request!

Housing: Plastic

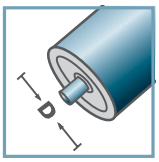

D [mm]
-

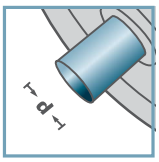

d [mm]
-

C [daN]
-

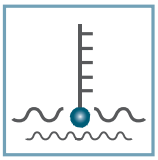

T [°C]
0° - 80°

-

Carton [pcs.]

500

Plastic Sprocket Wheel

KZA-40

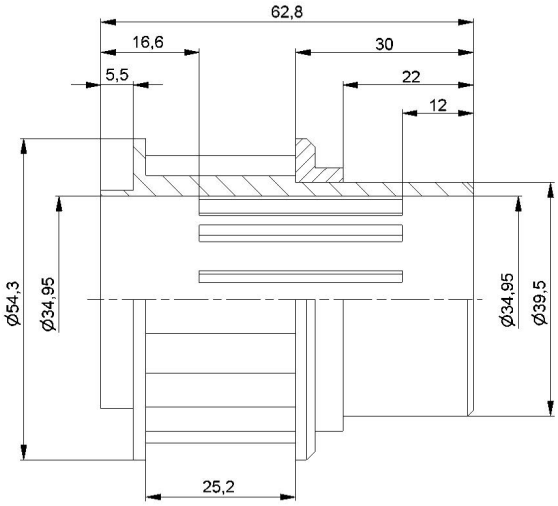

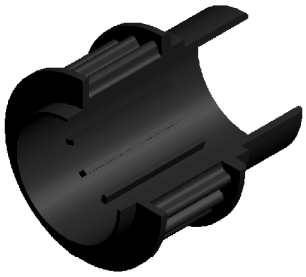

KZA-Z20.40

Other dimensions on request!

Housing: Plastic

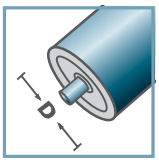

D [mm]
-

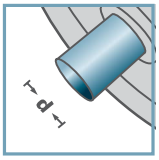

d [mm]
-

C [daN]
-

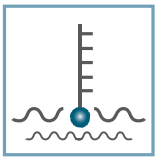

T [°C]
0° - 80°

-

Carton [pcs.]
140

Plastic Synchronous Belt Drive

KKR-40

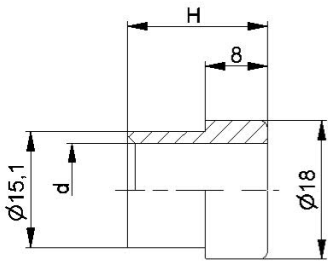

KKR-40		
	d	H
KKR-40	10	19
KKR-40	12	18
KKR-40	14	19
KKR-40	SW11	19
Other dimensions on request!		

Reducing Bush: Plastic

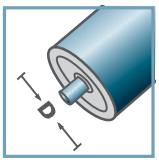

D [mm]
-

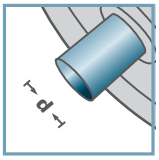

d [mm]
10; 12; 14; SW11

C [daN]
-

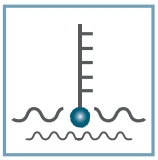

T [°C]
0° - 80°

-

Carton [pcs.]

500/8000

Reducing Bush

KKR-40

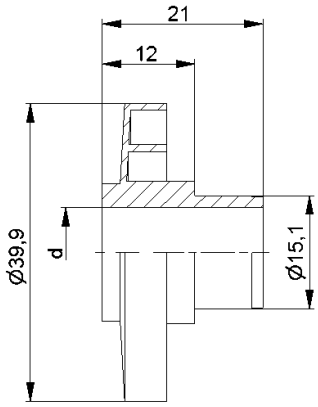

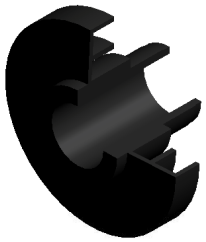

KKR-40	
Typ	d
KKR-40	10
KKR-40	12
KKR-40	14
KKR-40	SW11
Other dimensions on request!	

Labyrinth Seal: Plastic

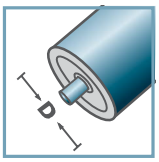

D [mm]
-

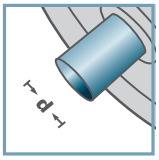

d [mm]
10; 12; 14; SW11

C [daN]
-

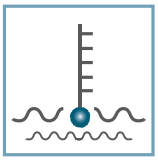

T [°C]
0° - 80°

-

Carton [pcs.]

200/1000

Labyrinth Seal

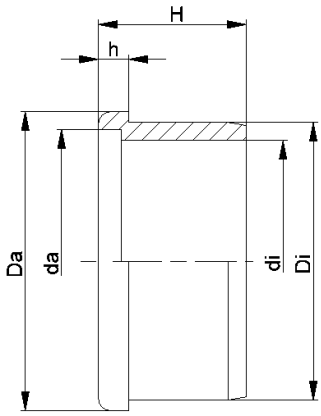

KKR-40						
Typ	Di	Da	di	da	H	h
50x1,5	47,25	50	39,3	42,6	25,2	5
50x2,8	44,7	50	39,3	42,6	25,2	5
60x1,5	57,3	60	47,0	50,7	25,5	5
60x2,0	56,3	60	47,0	50,7	25,5	5
Other dimensions on request!						

Distance Ring Fix: Plastic

Distance Ring Fix

KKR-40

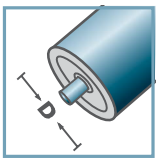

D [mm]
50 - 60

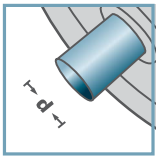

d [mm]
-

C [daN]
-

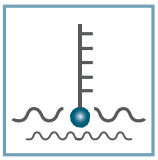

T [°C]
0° - 80°

-

Carton [pcs.]

ø50:	400
ø60:	250

KKR-40

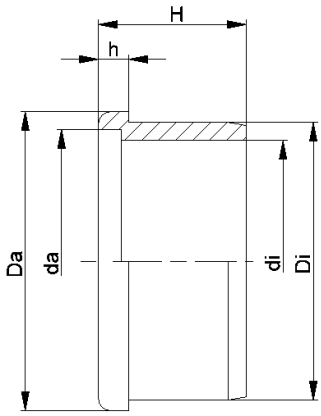

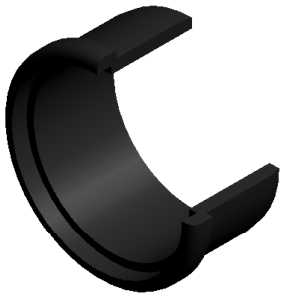

KKR-40						
Typ	Di	Da	di	da	H	h
50x1,5	47,2	50	40,6	44,6	25	5
Other dimensions on request!						

Distance Ring Friction: Plastic

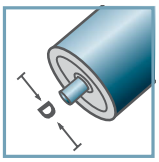

D [mm]
50 - 60

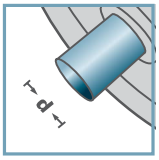

d [mm]
-

C [daN]
-

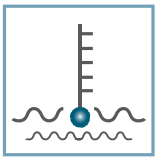

T [°C]
0° - 80°

-

Carton [pcs.]

400

Distance Ring Friction

KF-50

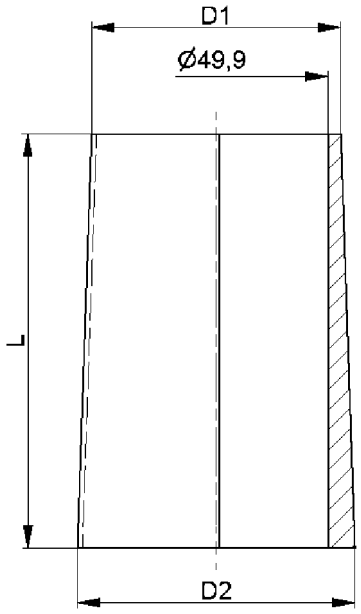

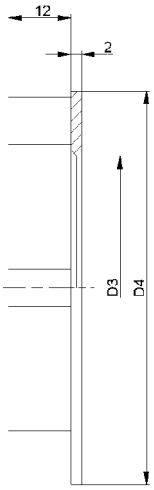

KF-50					
Type A	D1	D2	L	D3	D4
KF-50 I-a Type A	53,4	59,7	92,5	-	-
KF-50 I-b Type A	54,0	59,7	95,5	-	-
KF-50 II Type A	60,0	66,5	100,0	-	-
KF-50 III Type A	66,5	73,0	99,0	-	-
KF-50 IV Type A	73,5	80,0	100,0	50,6	75,5
KF-50 V Type A	80,0	86,5	99,5	50,7	81,7
KF-50 VI Type A	86,5	93,5	100,0	50,6	87,7
KF-50 VII Type A	93,5	100,0	100,0	50,6	94,3
KF-50 VIII Type A	100,0	106,5	95,5	-	-
KF-50 IX Type A	106,5	113,0	95,5	-	-
KF-50 X Type A	113,0	119,5	95,5		
Other dimensions on request!					

- Conic Roller: Plastic
- Endcap: Plastic

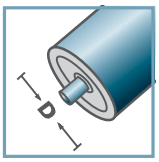

D [mm]
50

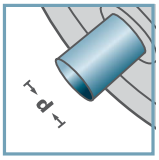

d [mm]
-

C [daN]
-

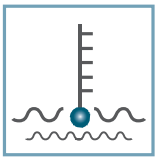

T [°C]
0° - 80°

-

Carton [pcs.]

Taper Sleeves

MRK-40

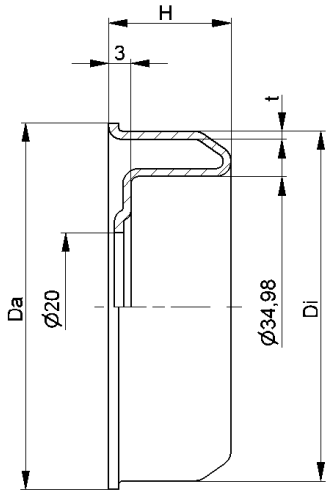

MRK-40				
Type	**Di ±0,1**	Da	H	t
MRK-50x1,5.40	47,3	49,5	16	1,2
MRK-50x2,0.40	46,3	49,5	16	1,2
MRK-60x2,0.40	56,3	59,5	16,5	1,5
MRK-60x3,0.40	54,3	59,5	16,5	1,5
Other dimensions on request!				

Housing: Steel, Zinc plated

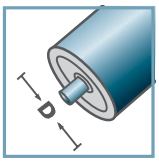

D [mm]
50 - 60

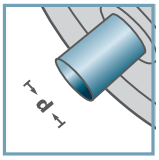

d [mm]
15

C [daN]
-

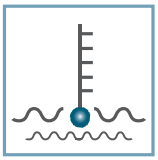

T [°C]
-

6202:
D35; d15; H11

Carton [pcs.]

Steel Housing

MRK-6004

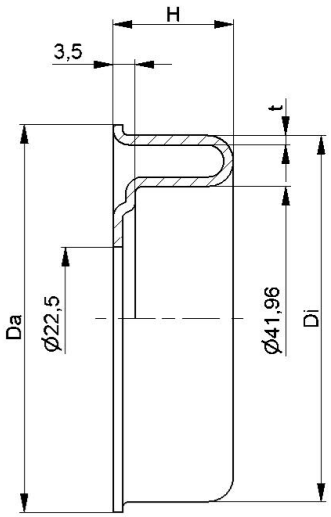

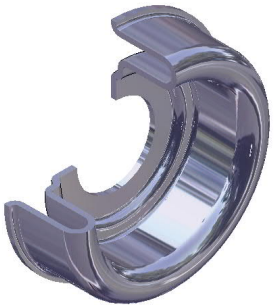

MRK-6004				
Type	**Di ±0,1**	Da	H	t
MRK-63,5x2,9/6004	58,1	61,5	19,0	1,5
Other dimensions on request!				

Housing: Steel, Zinc plated

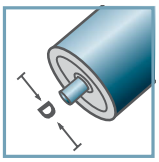

D [mm]
63,5

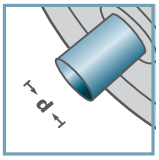

d [mm]
20

C [daN]
-

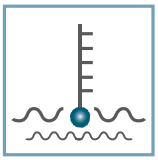

T [°C]
-

6004:
D42; d20; H12

Carton [pcs.]

Steel Housing

MRK-6204

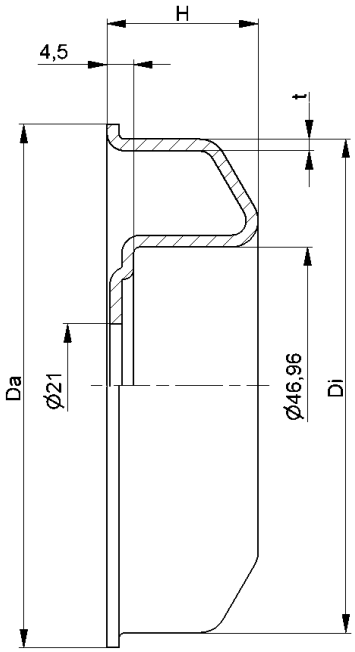

MRK-6204				
Type	**Di ±0,1**	Da	H	t
MRK-80x2,0/6204	76,5	79,5	23,5	2,0
MRK-80x3,0/6204	74,5	79,5	23,5	2,0
MRK-89x3,0/6204	83,5	88,5	23,5	2,0
MRK-89x3,25/6204	83,0	88,5	23,5	2,0
MRK-108x3,25/6204	102,0	107,5	25,0	2,0
Other dimensions on request!				

Housing: Steel, Zinc plated

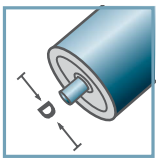

D [mm]
80 - 108

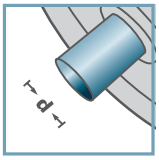

d [mm]
20

C [daN]
-

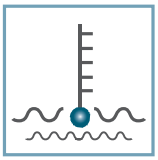

T [°C]
-

6204:
D47; d20; H14

Carton [pcs.]

Steel Housing

MRK-6205

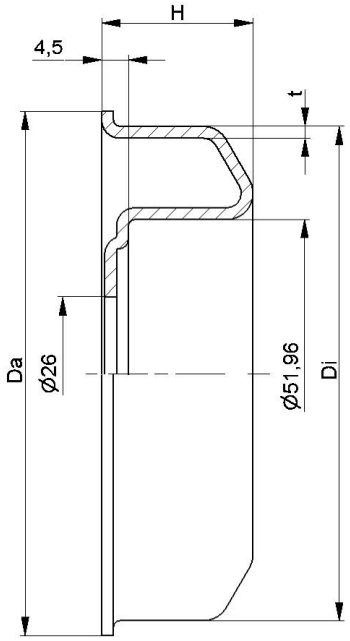

MRK-6205				
Type	**Di ±0,1**	Da	H	t
MRK-80x3,0/6205	74,5	79,5	23,5	2,0
MRK-89x3,0/6205	83,5	88,5	24,5	2,0
MRK-108x3,25/6205	102,0	107,5	25,5	2,0
Other dimensions on request!				

Housing: Steel, Zinc plated

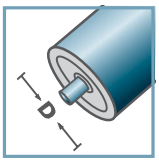

D [mm]
80 - 108

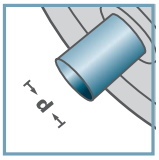

d [mm]
25

C [daN]
-

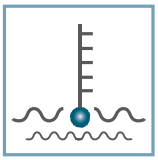

T [°C]
-

6205:
D52; d25; H15

Carton [pcs.]

Steel Housing